REVISIONS						
ZONE	LTR	DESCRIPTION	CHANGE No	DATE	BY	APPR'D
	A	RELEASED FOR PRODUCTION	73231	10DEC10	SLK	CFH

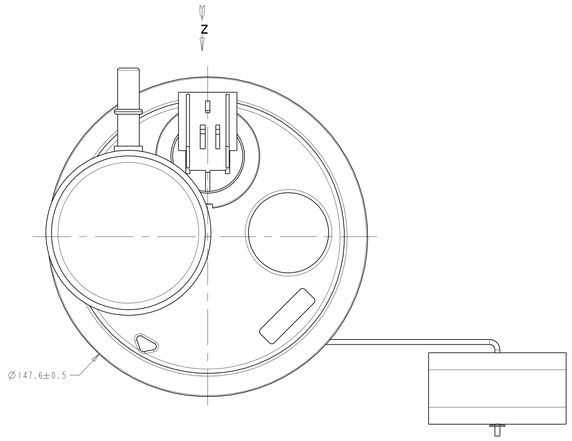

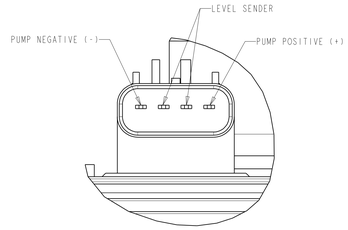

VIEW Z
E-CONN PINNOUT
SCALE 2:1

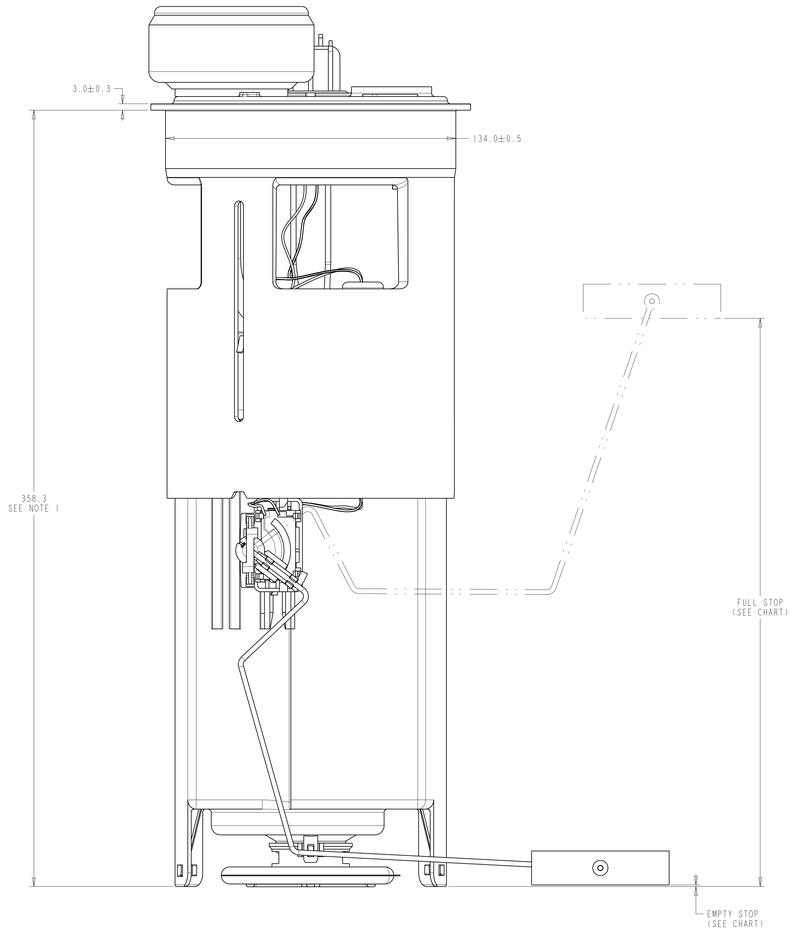

LEVEL SENDER CHART		
POINT	HEIGHT (MM)	RESISTANCE (OHMS)
FULL STOP	263.1	20±6
EMPTY STOP	0.0	220±6

NOTE:

1. FUEL MODULE IS SHOWN IN INSTALLED POSITION. TRAVEL FROM THIS POSITION IS ±25mm.

TI AUTOMOTIVE CONFIDENTIAL AND PROPRIETARY
THIS DRAWING IS PROPERTY OF TI AUTOMOTIVE. TI AUTOMOTIVE CLAIMS PROPRIETARY RIGHTS IN THE SUBJECT MATTER SHOWN AND DESCRIBED ON THIS DRAWING AND RETAINS ALL INTELLECTUAL PROPERTY RIGHTS. THE DRAWING IS PROVIDED FOR REFERENCE PURPOSES ONLY AND ON THE EXPRESS CONDITION THAT IT IS NOT TO BE DISCLOSED OR REPRODUCED IN WHOLE OR IN PART, OR USED OTHER OR USED FOR THE PURPOSE OF MANUFACTURE BY OR PROCUREMENT FROM OTHERS OF THE ARTICLE OR PART SHOWN WITHOUT TI AUTOMOTIVE'S EXPRESS WRITTEN CONSENT. NO LICENSE OR OTHER RIGHT TO TI AUTOMOTIVE'S INTELLECTUAL PROPERTY IS GRANTED BY THIS DRAWING TO RECIPIENT.
COPYRIGHT, TI AUTOMOTIVE, 2010. ALL RIGHTS RESERVED.

METRIC
ALL DIMENSIONS ARE IN MILLIMETERS

DO NOT SCALE
DECIMAL TOLERANCES UNLESS OTHERWISE SPECIFIED
ONE PLACE ±0.25 TWO PLACE ±0.13 ANGLES ±1°

THIRD ANGLE PROJECTION

DIMENSIONS IN ACCORDANCE WITH ASME Y14.5 - 2009

TI Automotive
630 COLUMBIA ST.
CARO, MI 48723
+1 989.673.7727

			MATERIAL/SPECIFICATION:
ENGINEER	C.HOCKMAN	10DEC10	
DES.MANAGER	S.KADY	10DEC10	
DESIGNER	S.KADY	10DEC10	

CAD SYSTEM: PRO/E	SCALE: 1:1	SHEET NO. 1 OF 1
REFERENCE (D/REV.): FM0000626		PLM REFERENCE/REV.: 0001051811/AA
REFERENCE (D/REV.): CAD DWG: AR0029361I/AA		PLM REFERENCE/REV.: CAD ASM: AR0029362/AA
DRAWING NAME: FUEL MODULE ASM - T300 MY02 DR 35 GAL AFTMT		
SIZE: A0	DRAWING NO./REV.: TU152	

16	15	14	13	12	11	10	9	8	7	6	5	4	3	2	1